STEAM WATERBATH VAPORIZER

OPERATION

The **STEAM-BATH™ SWB Series** (Steam Waterbath Vaporizer) is specifically designed for low to medium capacity City Gas, 'base load' and Peak Shaving applications. The design is based on a dual helical coil configuration. One coil contains the steam for heating the waterbath and the other coil contains the LPG to be vaporized.

During operation, dry, saturated steam enters the vaporizer's steam coil and heats the waterbath. Liquid LPG enters the vaporizer's LPG coil and is heated by the hot water surrounding the coil. Boiling of the LPG results. The steam condenses as heat is removed and accumulates in the condensate manifold at the base of the vaporizer. A steam trap removes the condensate. A thermally controlled steam regulator is provided to maintain LPG temperatures within a desired temperature range, and prevent boiling of the waterbath.

Note: Incoming steam must be saturated. Superheated steam reduces vaporizer capacity.

STANDARD FEATURES

- Steel tube LPG and Steam coils designed and manufatured per ASME Section VIII, Division 1.
- LPG heat exchanger coil rating: 1.72Mpa (250Psig)
- Steam coil heat exchanger rating: 1.72Mpa (250Psig)
- UL stamped external relief valve: 1.72Mpa (250Psig)
- All electrical components and their installation comply with NFPA Pamphlet 58 and 70.
- Explosion Proof configuration meets Class I, Division 1, Group D design.
- Safeties Include:
  - *Liquid LPG carry-over switch*
  - *LPG Relief Valve*
  - *Hi Waterbath Temperature*
  - *Safety Solenoid Valve*
- Fully insulated with aluminum jacket.
- Float activated high liquid LPG level switch.
- Inlet safety solenoid valve.
- All exposed metal surfaces are mechanically cleaned, primed and painted.
- Complete with all operating and safety controls.
- Remote mounted NEMA 12 Control Panel.

Models SWB100 - 1500

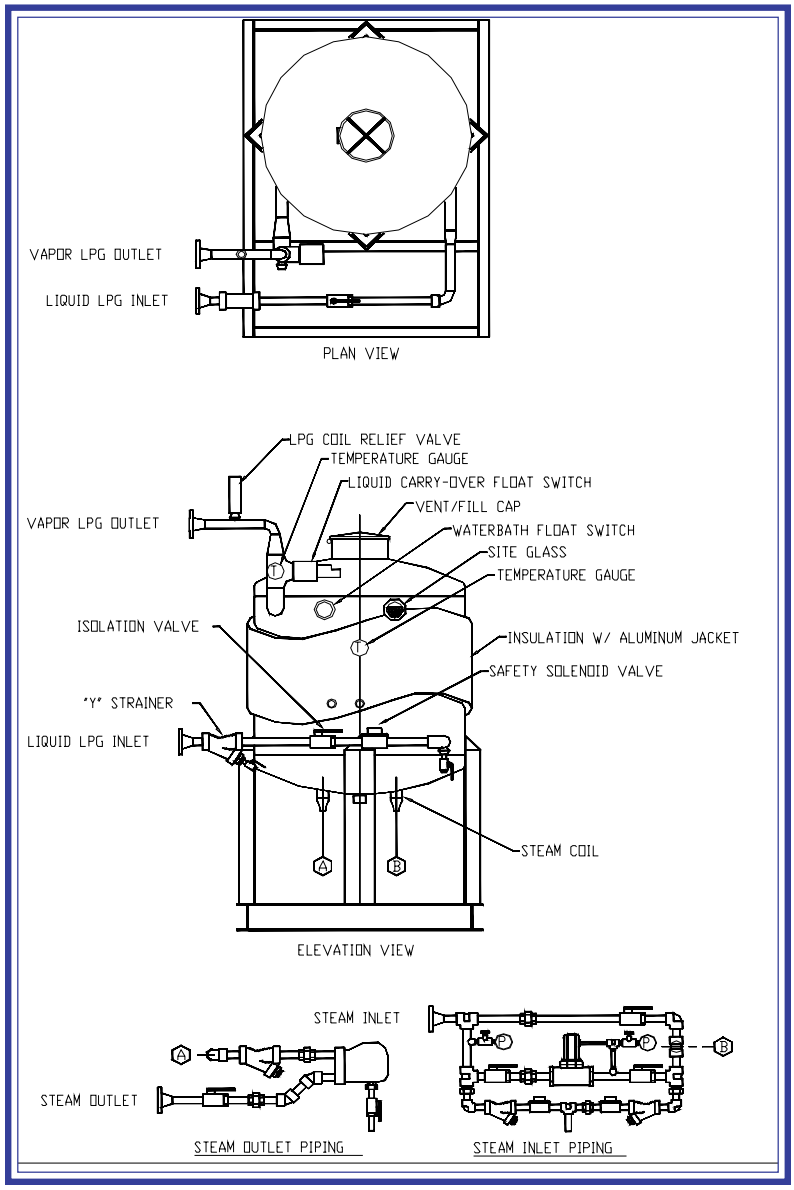

OPTIONS

- Spare Parts Kit

STEAM-BATH™ SWB SERIES

STEAM WATERBATH VAPORIZOR SPECIFICATIONS

MODEL SWB ▶		100	200	300	400	500	750	1000	1500
VAPORIZATION CAPACITY	kg/h	100	200	300	400	500	750	1000	1500
	U.S. Gallon/h	50	100	150	200	250	350	475	700
STEAM HEAT EXCHANGER SURFACE AREA	m^2	1.1	2.2	3.3	4.4	5.5	8.2	11	16.4
	ft^2	11.8	23.6	35.4	47.1	59	88.5	118	177
LPG HEAT EXCHANGER SURFACE AREA	m^2	0.67	1.35	2	2.7	3.4	5.07	6.8	10.1
	ft^2	7.27	14.6	21.8	29.1	36.4	54.6	72.7	109
SHIPPING WEIGHT	kg	373	386	448	481	511	563	704	913
	lbs	820	850	985	1060	1125	1240	1560	2010
HEAT EXCHANGER DESIGN PRESSURE	Mpa	←			1.72			→	
	PSIG				250				
HEAT EXCHANGER TEST PRESSURE	Mpa	←			2.58			→	
	PSIG				375				
STEAM PRESSURE	Mpa	←			0.21	*Minimum*		→	
	PSIG				30				
ELECTRICAL	v/ph/hz	←			220/1/50 110/1/60			→	
LPG RELIEF VALVE SET POINT	Mpa	←			1.72			→	
	PSIG				250				
SHELL DESIGN PRESSURE	Mpa	←			0.34			→	
	PSIG				50				
SHELL RELIEF VALVE SET POINT	Mpa	←			0.34			→	
	PSIG				50				

- *Vaporization ratings at .69Mpa (100Psig) and -18°C (0°F) with LPG of 70%B, 30%P.*
- *Product improvement is a continuing goal at Ely Energy, Inc. Designs and specifications are subject to change without notice.*

STEAM-BATH™ is a U.S. trademark of **Ely Energy, Inc.**

Ely Energy

Ask for your free ***"ELY ENERGY CORPORATE BROCHURE"***

Represented By:

11385 E. 60th Place So.
Tulsa, Oklahoma 74146, USA

Phone: 918.250.6601
Fax: 918.254.5412
Visit us at: www.elyenergy.com
E-mail: sales@elyenergy.com

Copyright 1999 - Ely Energy Inc.

Publication 4/14/03
Supercedes SWB1/99.1